# Split Air Conditioner

Owner's Manual

Residential Air Conditioners

INVERTER

MODELS: AMTCM4H4R18

Thank you for choosing Residential Air Conditioners,please read this owner's manual carefully before operation and retain it for future reference.

In line with the company's policy of continual product improvement, the aesthetic and dimensional characteristics, technical data and accessories of this appliance may be changed without notice.

## CONTENTS




| | | |
|---|---|---|
| GENERAL INFORMATION | Conformity And Range | 1 |
| | The Instructions Before Use | 2 |
| | Name of Parts | 3 |
| | Technical Data | 4 |
| | Outdoor Unit Working Temperature Range | 4 |
| INSTALLER | Electrical Connections | 5 |
| | Installing The Outdoor Unit | 8 |
| | Bleeding | 6 |
| | Maintenance | 7 |
| | Installation Dimension Diagram | 7 |
| | Check After Installation | 8 |


The products in this manual may be different with the rea one, according to different models, some models have displayer and some models without displayer, the position and shape of the displayer please refer to the real one.

This appliance is not intended for use by persons (including children) with reduced physical, sensory or mental capabilities, or lack of experience and knowledge, unless they have been given supervision or instruction concerning use of the appliance by a person responsible for their safety.

Children should be supervised to ensure that they do not play with the appliance.

# Explanation of Symbols

| | |
|---|---|
| ⚠ DANGER | Indicates a hazardous situation that, if not avoided, will result in death or serious injury. |
| ⚠ WARNING | Indicates a hazardous situation that, if not avoided, could result in death or serious injury. |
| ⚠ CAUTION | Indicates a hazardous situation that, if not avoided, may result in minor or moderate injury. |
| NOTICE | Indicates important but not hazard-related information, used to indicate risk of property damage. |
| ⚠ | Indicates a hazard that would be assigned a signal word WARNING or CAUTION. |

## CONFORMITY AND RANGE

GENERAL INFORMATION

This appliance can be used by children aged from 8 years and above and persons with reduced physical,sensory or mental capabilities or lack of experience and knowledge if they have been given supervision or instruction concerning use of the appliance in a safe way and understand the hazards involved.
Children shall not play with the appliance.
Cleaning and user maintenance shall not be made by children without supervision.

⚠ Please read this owner's manual carefully before operating the unit and keep it carefully for consultation. Instructions for installation and use of this product are provided by the manufacturer.

⚠ Only use the air conditioner as instructed in this booklet. These instructions are not intended to cover every possible condition and situation. As with any electrical household appliance, common sense and caution are therefore always recommended for installation, operation and maintenance.

## WARNING

★ When having a burning smell or smoke,please turn off the power supply and contact with the service center.

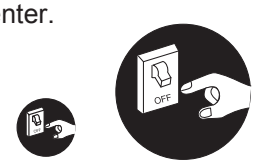


If the abnormity still exists,the unit may be damaged,and may cause electric shock or fire.

★ The power supply must adopt the special circuit that with air switch protection and assure it has enough capacity.The unit will be turned on or off according to your requirement automatically,please do not turn on or turn off the unit frequently,otherwise disadvantage effect may be caused to the unit.

★ Never cut off or damage power cables and control wires. If the power cable and signal control wire were damaged, change them by professional.

★ Power must adopts the special circuit to prevent fire.

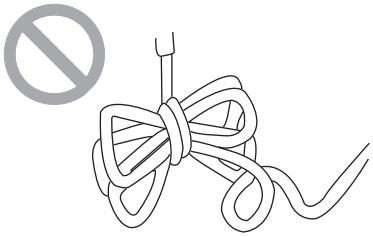

Otherwise, it can cause electric shock or fire.

★ Disconnect the power supply if long putting the air conditioner out of use.

Otherwise,the accumulated dusts may cause overheating or fire.

★ Never damage the electric wire or use the electric wire which is not appointed.

Otherwise,it will cause overheating or fire.

★ When cleaning,it is necessary to stop driving and turn off the power supply.

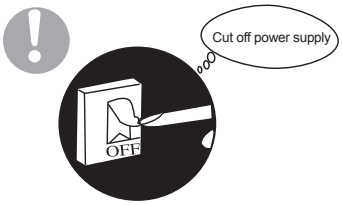


Otherwise,it may cause electric shock or damage.

★ Rated voltage of this air conditioner 208/230V, 60Hz, The compressor will vibrate sharply if the voltage is too low, resappointed. amage to refrigerating system. Electrical component are easy to damage if the voltage is too high.

★ Don't attempt to repair the air conditioner by yourself.

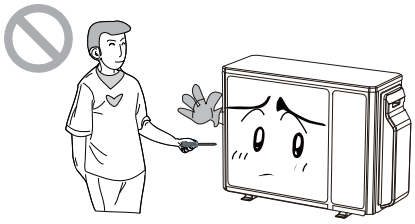

The wrong repair will lead to an electric shock or fire,so you should contact the service center to repair.

★ Please note whether the installed stand is firm enough or not.

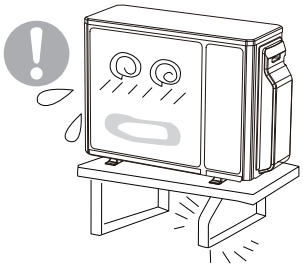

If it is damaged, it may lead to the fall of the unit and cause the injury.

★ Don't step on the top of the outdoor unit or place something on it.

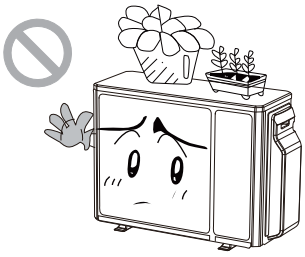

As falling off the outdoor unit can be dangerous.

★ Earthing: The unit must be reliably earthed.The earthing cable shall be connected to the special earthing device in the construction.

## AMTCM4H4R18;

WARNING

- Be sure to cut off the power supply before cleaning the air conditioner; otherwise electric shock might happen.
- Wetting of air conditioner may cause the risk of electric shock. Make sure not to wash your air conditioner in any case.
- Volatile liquids such as thinner or gasoline will cause damage to the appearance of air conditioner. (Only use soft dry cloth moist cloth clean the air conditioner cabinet).
- This product must not be disposed together with the domestic waste.
  This product has to be disposed at an authorized place for recycling of electrical and electronic appliances.
- The temperature of refrigerant circuit will be high,please keep the interconnection cable away from the copper tube.

| OUTDOOR UNIT | |
|---|---|
| No. | Description |
| 1 | Air outlet grille |
| 2 | Valve |

Note: The above figures are only intended to a simple diagram of the appliance and may not correspond to the appearance of the units that have been purchased.

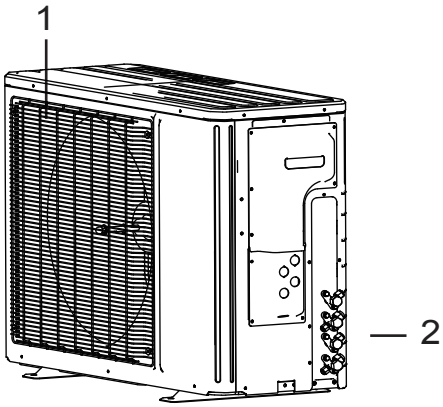


## 24K

WARNING

- If the supply cord is damaged, it must be replaced by the manufacturer or its service agent or a similarly qualified person in order to avoid a hazard.
- Be sure to cut off the power supply before cleaning the air conditioner; otherwise electric shock might happen.
- Wetting of air conditioner may cause the risk of electric shock. Make sure not to wash your air conditioner in any case.
- Volatile liquids such as thinner or gasoline will cause damage to the appearance of air conditioner. (Only use soft dry cloth moist cloth clean the air conditioner cabinet).
- Do not dispose this product as unsorted municipal waste. Collection of such waste separately for special treatment is necessary.
- The temperature of refrigerant circuit will be high, please keep the interconnection cable away from the copper tube.

| OUTDOOR UNIT | |
|---|---|
| No. | Description |
| 1 | Air outlet grille |
| 2 | Valve |

Note: The above figures are only intended to be a simple diagram of the appliance and may not correspond to the appearance of the units that have been purchased.

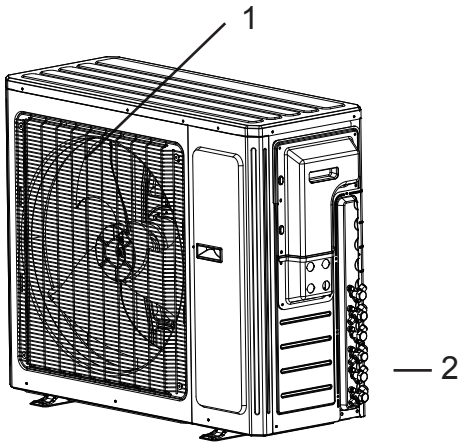

| MODE | AMTCM4H4R18 | |
|---|---|---|
| Electrical data | | |
| Electricity supply | 208/230V,60HZ | |
| Fuse or air switch | 25 | |
| Minimum power cord section | 2.1 | $mm^2$ |
| | | |
| Size and clearance | | |
| 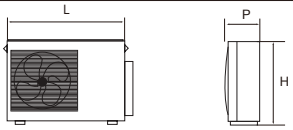  L | 890 | mm |
| P | 362 | mm |
| H | 700 | mm |

TECHNICAL DATA GENERAL INFORMATION

| MODE | 24K | |
|---|---|---|
| Electrical data | | |
| Electricity supply | 208/230V,60HZ | |
| Fuse or air switch | 35 | |
| Minimum power cord section | 3.3 | $mm^2$ |
| | | |
| Size and clearance | | |
| 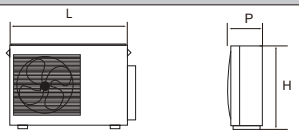  L | 920 | mm |
| P | 380 | mm |
| H | 790 | mm |

## OUTDOOR UNIT WORKING TEMPERATURE RANGE



| | OutdoorsideDB/WB( ℃ ) |
|---|---|
| Maximum cooling | 48(118.4°F)/- |
| Maximum heating | 27(80.6°F)/- |

AMTCM4H4R18
24K

1. Remove the handle at the right side plate of the outdoor unit (one screw).
2. Remove the cable clamp, connect the power connection cable with the terminal at the row of connection and fix the connection. The fitting line distributing must be consistent with the indoor unit. terminal of line bank. Wiring should meet that of indoor unit.
3. Fix power connection wire by wire clamp.
4. Ensure wire has been fixed well.
5. Install the handle.

Including an air switch with suitable capacity, please note the following table. Air switch should be included magnet buckle and heating buckle function, it can protect the circuit-short and overload. (Caution: please do not use the fuse only for protect the circuit)

| Air-conditioner | Air switch capacity |
|---|---|
| AMTCM4H4R18 | 25A |
| 24K | 35A |

An all-pole disconnection switch having a contact separation of at least 3mm in all pole should be connected in fixed wiring.

Wrong wire connection may cause malfunction of some electric components.After fixing cable, ensure that leads between connection to fixed point have some space.

The connection pipes and the connectiong wirings of the unit A and unit B must be corresponding to each other respective.

The appliance shall be installed in accordance with national wiring regulations.

Note: the above figures are only intended to be a simple diagram of the appliance and may not correspond to the appearance of the units that have been purchased.

AMTCM4H4R18

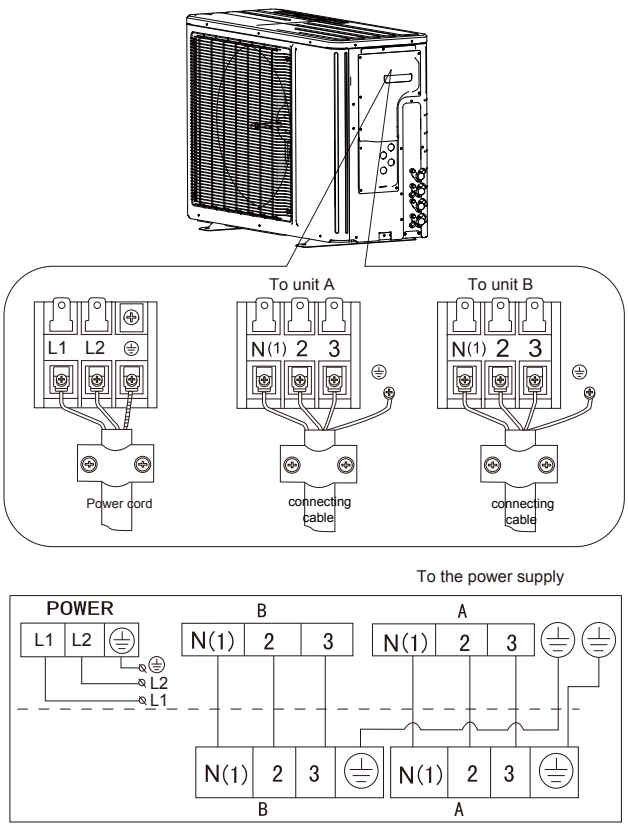


24K

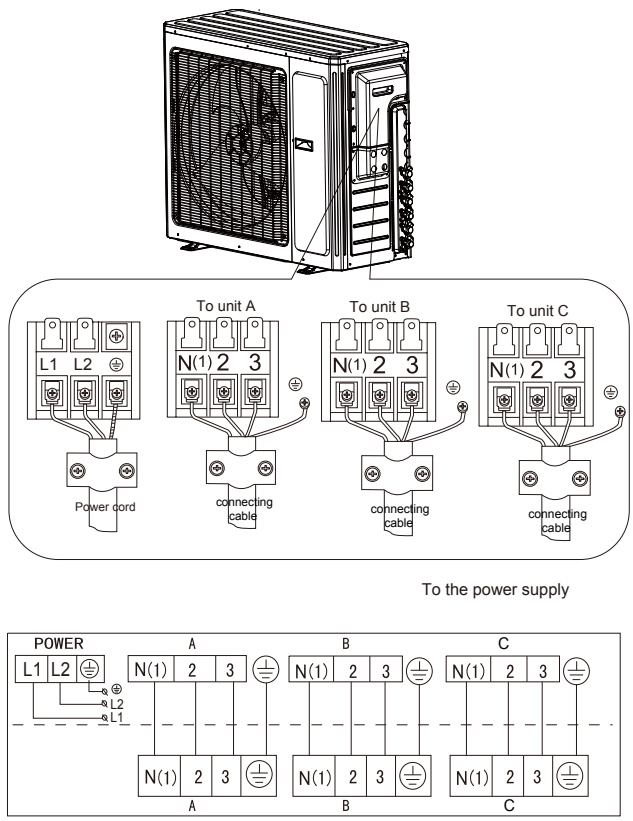

## INSTALLING THE OUTDOOR UNIT INSTALLER

### Location

Use bolts to secure the unit to a flat, solid floor. When mounting the unit on a wall or the roof, make sure the support is firmly secured so that it cannot move in the event of intense vibrations or a strong wind.

- Do not install the outdoor unit in pits or air vents

### Installing the pipes

Use suitable connecting pipes and equipment for the refrigerant R410A.

| Models(m) | 18Kx2 | 24Kx2 | 24Kx3 | 28Kx4 |
|---|---|---|---|---|
| Max. connection pipe length | 20 | 20 | 60 | 70 |
| Max. connection pipe length (Simple one indoor unit) | 10 | 10 | 20 | 20 |

The refrigerant pipes must not exceed the maximum heights 10m(18Kx2&24Kx2&24Kx3&28Kx4).

Wrap all the refrigerant pipes and joints.

Tighten the connections using two wrenches working in opposite directions.

**Caution: Installation Must be Performed in Accordance with the NEC/CEC by Authorized Personnel Only.**

**Install the drain fitting and the drain hose (for model with heat pump only)**

Condensation is produced and flows from the outdoor unit when the appliance is operating in the heating mode. In order not to disturb neighbours and to respect the environment,install a drain fitting and a drain hose to channel the condensate water. Install the drain fitting and rubber washer on the outdoor unit chassis and connect a drain hose to it as shown in the figure.

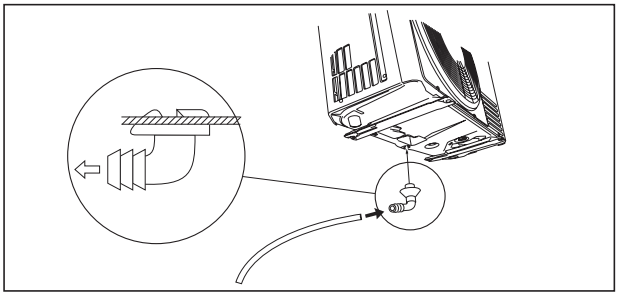

## BLEEDING INSTALLER

Humid air left inside the refrigerant circuit can cause compressor malfunction. After having connected the indoor and outdoor units, bleed the air and humidity from the refrigerant circuit using a vacuum pump.

(1) Unscrew and remove the caps from the 2-way and 3-way valves.
(2) Unscrew and remove the cap from the service valve.
(3) Connect the vacuum pump hose to the service valve.
(4) Operate the vacuum pump for 10-15 minutes until an absolute vacuum of 10 mm Hg has been reached.
(5) With the vacuum pump still in operation, close the low-pressure knob on the vacuum pump coupling. Stop the vacuum pump.
(6) Open the 2-way valve by 1/4 turn and then close it after 10 seconds. Check all the joints for leaks using liquid soap or an electronic leak device.
(7) Turn the body of the 2-way and 3-way valves. Disconnect the vacuum pump hose.
(8) Replace and tighten all the caps on the valves.

| Diameter (mm) | Twisting moment (N.m) |
|---|---|
| Φ6 | 15-20 |
| Φ9.52 | 35-40 |
| Φ16 | 60-65 |
| Φ12 | 45-50 |
| Φ19 | 70-75 |

18、24K unit need to be installed the indoor unit

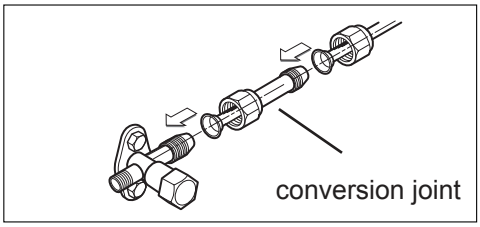


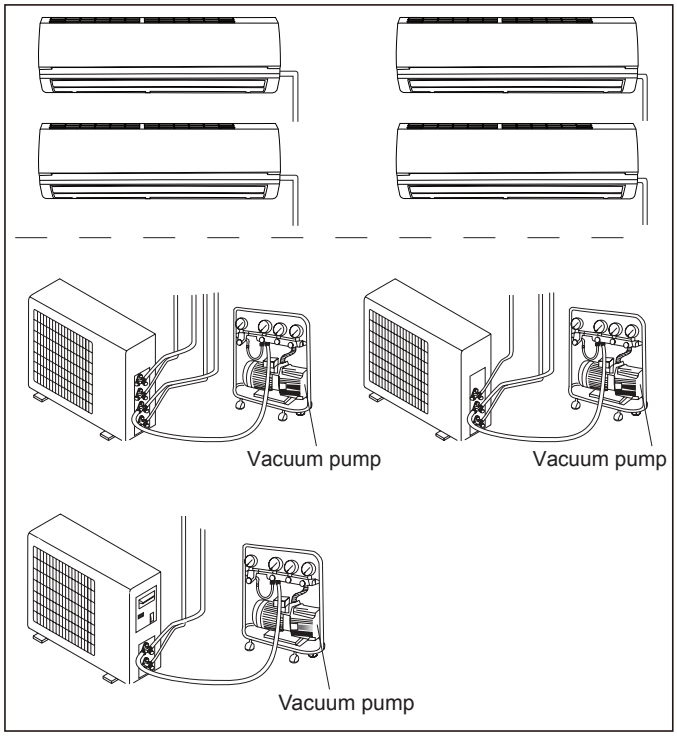


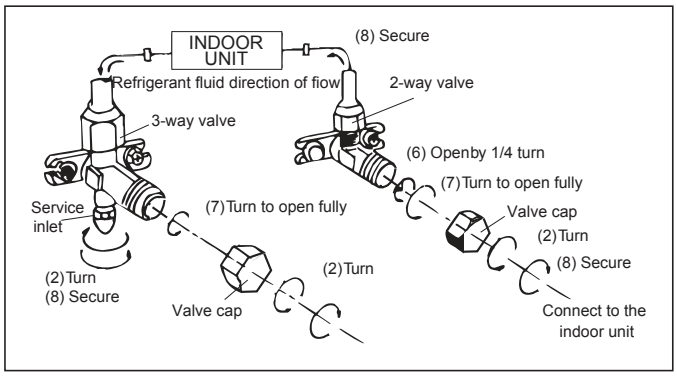

## MAINTENANCE INSTALLER

- ⚠ Use suitable instruments for the refrigerant R410A.
- ● Do not use any other refrigerant than R410A.
- ⚠ Do not use mineral oils to clean the unit.

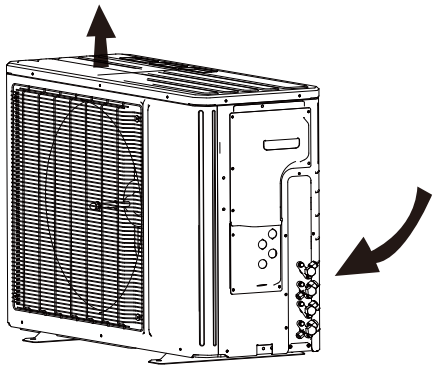

## INSTALLATION DIMENSION DIAGRAM INSTALLER

- ⚠ The installation must be done by trained and qualified service personnel with reliability according to this manual.
- ⚠ Contact service center before installation to avoid the malfunction due to unprofessional installation.
- ⚠ When picking up and moving the units, you must be guidedby trained and qualified person.
- ⚠ Ensure that the recommende dspace is left around the appliance.

AMTCM4H4R18

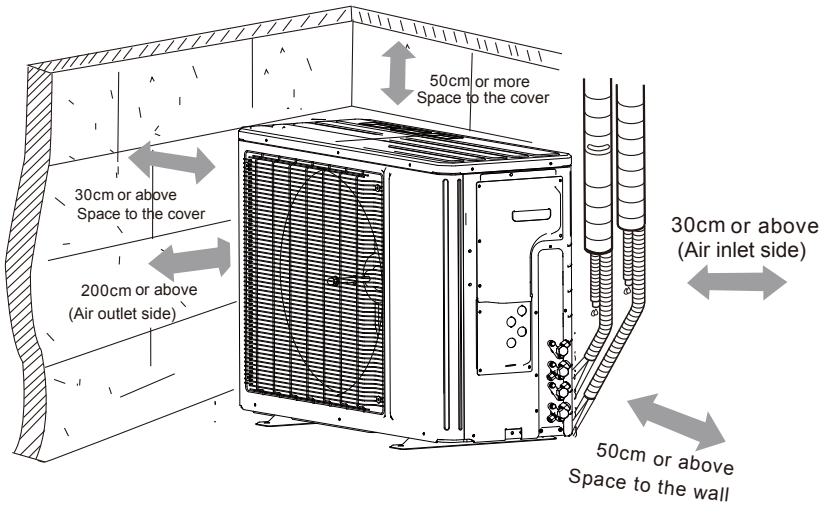


24K

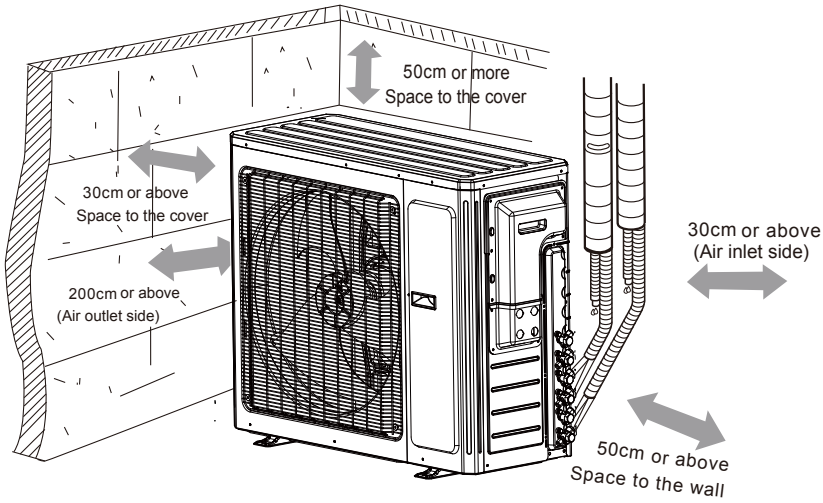

| Check Items | Problems Owing to Improper Installation |
|---|---|
| Is the installation reliable? | The unit may drop, vibrate or make noises |
| Has the gas leakage been checked? | May cause unsatisfactory cooling (heating) effect |
| Is the thermal insulation of the unit sufficient? | May cause condensation and water dropping |
| Is the drainage smooth? | May cause condensation and water dropping |
| Does the power supply voltage accord with the rated voltage specified on the nameplate? | The unit may bread down or the components may be burned out |
| Are the lines and pipelines correctly installed? | The unit may bread down or the components may be burned out |
| Has the unit been safely grounded? | Risk of electrical leakage |
| Are the models of lines in conformity with requirements? | The unit may bread down or the components may be burned out |
| Are there any obstacles near the air inlet and outlet of the indoor and out-door units? | The unit may bread down or the components may be burned out |
| Have the length of refrigerating pipe and refrigerant charge amount been recorded? | It is not easy to decide the charge amount of refrigerant. |

66129925031